With safety switching element, silicone membrane (in- and outside) and low temperature grease

Design N1A
Cable entry M16 x 1,5

Design N1A
Cable entry M16 x 1.5

With safety switching element

Design N1A
M12 plug adjustable, 4-pin + PE

Dimension drawings

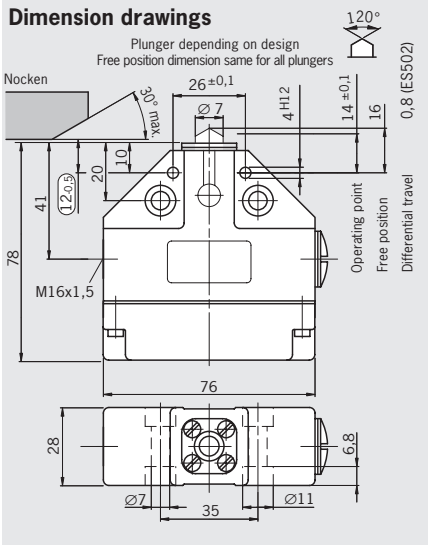

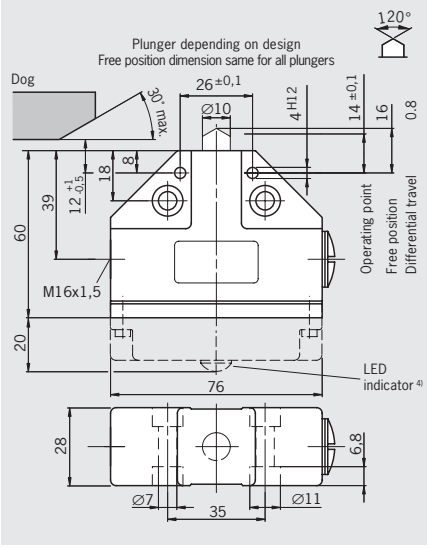

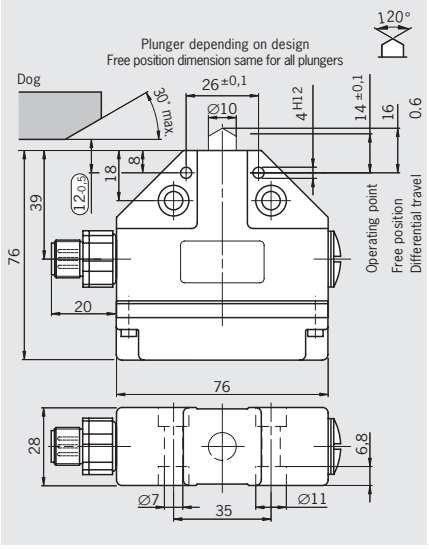

Wiring diagrams

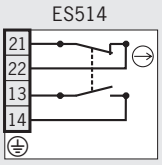

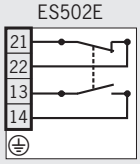

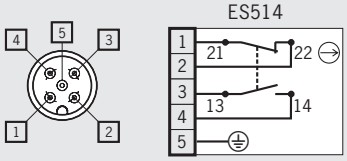

Die-cast aluminum, anodized		Die-cast aluminum, anodized			Die-cast aluminum, anodized		
IP 67 Mating connector inserted and screwed tight		IP 67			IP 67 Mating connector inserted and screwed tight		
-30...+80		-5...+80			-25...+80		
Chisel	Roller	Chisel	Roller 3)	Ball	Chisel	Roller	Dome
± 0.002	± 0.01	± 0.002	± 0.01	± 0.01	± 0.002	± 0.01	± 0.002
40	80	40	80	10	40	80	10
0.01		0.01			0.01		
≥ 30		≥ 20			≥ 30		
ES502E		**ES502E** 4)			**ES514**		
1 NO contact + 1 NC contact ⊖		1 NO contact + 1 NC contact			1 NO contact + 1 NC contact ⊖		
Snap-action switching contact		Snap-action switching contact			Snap-action switching contact		
1 x 10^6 operating cycles		30 x 10^6 operating cycles			1 x 10^6 operating cycles		
2.5		2.5			2.5		
250		250			30		
AC-15 U_e 230V I_e 2.5A		AC-12 U_e 230V I_e 10A / AC-15 U_e 230V I_e 6A			AC-15 Ue 36V Ie 2.5A		
DC-13 U_e 24V I_e 6A		DC-13 U_e 24V I_e 6A			DC-13 Ue 24V Ie 4A		
Silver, gold-plated		Silver, gold-plated			Silver, gold-plated		
5		10			5		
24		24			24		
10		10			4		
Screw terminal 0.34 ... 1.5 mm²		Screw terminal 0.34 ... 1.5 mm²			Plug connector M12 5)		

4) Version with LED function display AC/DC 10-60V or AC 110/230 V on request.
5) For mating connector see page 46 and 47.

ES514	ES502E	ES514
110 462 N1AD514AM-MC2222	**079 265** N1AD502-M	**087 603** N1AD514SVM5-M
103 247 N1AR514AM-MC2222	**078 485** N1AR502-M	**087 604** N1AR514SVM5-M
–	**083 847** N1AK502-M	–
–	–	**090 743** N1AW514SVM5-M